Operation manual
Parquet sanding machine Woody



Technical specifications

Model	**Woody**
Power	3 000 W
Rotation of the discs	800 rpm
Working width	450 mm

Operation manual / Spare parts list

Parquet sanding machine Woody

Index

1	**Preliminary notes**	3
1.1	General notes for the operator	4
1.2	Guarantee	5
2	**Safety**	6
2.1	General information	6
2.2	Danger by improper use of the machine	6
2.3	Safety notes: Operation	6
2.4	Designated use	6
2.5	General safety notes	7
2.6	Prerequisites for the user	7
2.7	Security and machine protection facilities	7
2.8	Inspection in accordance with VBG 4 § 5 (1) Nr. 2	8
2.9	Safety notes: Dust	8
2.10	Danger of cutting	8
3	**General instructions for the user**	9
3.1	Scope of delivery	9
3.2	Disposal	9
3.3	Dimensions/Weight/Technical details	9
4	**Assembling**	10
5	**Transportation**	10
6	**Operation**	10
6.1	Assembly of the vacuum system	10
6.2	Preparation of the machine	12
6.3	Starting the machine	12
6.4	Leading the machine	13
6.5	After the operation	13
7	**Inspection before, during and after the operation**	13
E	**Annexe E: Spare parts list**	14
E.1	Ordering direction for the spare parts	14
E.2	Ordering address	14
	Exploding view Woody	15
CE	**Declaration of conformity**	17

1 Preliminary notes

Dear customer,

you have decided for the Parquet sanding machine Woody, the correct choice for quality and performance.Your Woody is the result of the logical conversion of long-standing experience.

This machine unites extremely high grinding performance, excellent vacuum system with mature and reliable technology simply to be used.

This operation manual contains important notes for the operation of your machine.

Note

Please read the operation manual carefully, in particular the safety notes and ensure that all operators read this operation manual prior to operate the machine.

Adherence to the safety notes not only helps to protect against potential dangers for health and personal safety but also prevents an improper utilization of the machine.

Pay attention and adhere to all warning labels on the machine. Replace any missing or damaged labels immediately.

It is too late if you do it while working!

Never allow anybody without sufficient skills and knowledge to operate the machine.

This will allow you to operate the machine without running any danger and encountering any troubles. It will help you to avoid any unnecessary delays caused by repairs, and will pave the ground for an optimum utilization and operation of this equipment.

No liability for the damages which originate from the use of these operating instructions.
Changes reserve.

Roll GmbH
Flooring technology
Albstr. 12
D-72820 Sonnenbühl
Germany

Phone: +49(0)7128-92800
Fax: +49(0)7128-928011
E-Mail: info@roll-gmbh.de
http://www.roll-gmbh.de

State: June 2010

The operation manual identify important notes on safety and damage prevention using the following symbols:



Warning!

Designates a potentially hazardous situation.
Please note that failure could cause death or injuries.



Attention!

Designates a dangerous situation.
Please note that failure could cause damages at products or others.



Note!

Important notes on the operation, intended for an optimum utilization of the equipment and other useful information.

The operation manual is intended to ***accompany the machine****.*

The operation manual has been prepared by the manufacturer on the basis of his knowledge and experience with respect to design, production and operation.

Specific instructions of the user may be added to these operation manual (for example to refer to surveillance and reporting regulations, inter-company maintenance and inspection schedules. The inspection intervals are in accordance with VBG 4 §§ 3 and 5 und § 20 GefStoffV (Regulations of hazardous materials).

1.1 General notes for the operator

As a operator you are responsible for:

- The proper and normal operation by trained persons only,
- The adherence to the safety regulations, the safety notes, and the provisions referring to working safety and accident prevention,
- The technical instruction of the operation personnel on the equipment and their reading of the operation instructions of the equipment.

1.2 Guarantee and liability

ROLL ensures a guarantee and liability are in accordance with our currently valid general business and sales conditions. The guarantee runs out after 12 months from purchase date.

We reject any guarantee claims for tools which are not in their original condition, or for altered or changed tools or which are not used in accordance to the intended use.

We guarantee free maintenance of this machine when getting carriage paid, in case of damages due to manufacturing defects or material defects; provided that the machine is correct used and not changed or altered. Wearing parts are not under warranty

The guarantee claim expires:

- In case of damages caused by improper operation and utilization other than intended use.
- In case of incorrect assembly, intervention of unauthorized persons or utilizations of accessories or replacement parts that are not ROLL original parts (with exception of commercially available sanding discs).

We strongly recommend the use of genuine ROLL spare parts and accessories even after expiration of the warranty period. This is the only way to ensure an impeccable operation of your machine.

Note!

Check the shipment in order to ensure that it is complete in accordance with the chapter „scope of delivery“, and inform your dealer immediately, should any shipment be incorrect.

2 Safety

2.1 General information

Adherence to the safety notes helps to protect against injuries and reduces the risk of an improper utilization of the machine. Every user of this machine and personnel charged with the assembly, maintenance or repair of this machine must have read and understood the contents of the instructions prior to starting any work.

2.2 Danger by improper use of the machine



Warning, injury danger when starting the machine!

When starting the machine there originates an acceleration (the perceptible jerk) which can bring the machine out of control.

Hold the machine with both hands.

2.3 Safety notes: Operation



Warning, Danger of electrical shocks

Do not use damaged lines and plugs.

Perform a safety check prior to each start of the machine:

- Inspect the connecting cables and connectors/pugs for damage and improper connected load.
- Route the electrical cables properly to prevent persons tripping over them.
- Do not switch on the machine until it is in working position.
- Hold the machine firmly with both hands at the handle.
- Switch off the machine immediately when the operation is completed.

2.4 Designated use

The Parquet sanding machine Woody is suitable for dry sanding of parquet and plank floors.

No other use is allowed.

Using the machine outdoors is not allowed.

If the machine is used for purposes other than those intended, the manufacturer of the machine can not be held liable for any damage to persons, property or pets resulting from such misuse.

2.5 General safety notes

The Parquet sanding machine Woody is build and conceived under observance and attention of the basic security standards and health standards.

- In spite of all safety measures and protective precautions dangers may occur, particularly if
  - improper use or
  - regulation-contrary use

  the causes are.

- With nonobservance of the operating instructions, in particular of the security tips, injury danger or even mortal danger, also the danger of the damage of real values exists.



Warning, Danger of electrical shocks

Do not use damaged lines and plugs.
The machine may be operated only in a technically flawless condition and with all safety facilities fully operational.

In some building sites, above all in buildings their stream supply network and the security are unknown; a protective plug is to be used.

2.6 Prerequisites for the user

The users of the machine are required to

- be instructed with the operation of the machine,
- be familiar with and able to execute the operations required for the handling and assembly of the machine,
- be aware of and know the applicable safety regulations for the operation of such machines and adhere to these (cf. The chapter “Preliminary notes”),
- be informed about possible additional local (national) regulations (e.g. with respect to safety facilities),
- be informed about potential threats and dangers arising from the operation of such machines.

2.7 Security and machine protection facilities

A safety switch is placed at the back of the handle to avoid accidental starting up.
Always press this safety switch to switch the machine on and then push and hold the control levers to start up.

2.8 Inspection in accordance with VBG 4 § 5 (1) Nr. 2

The user is responsible for ensuring that the machine is inspected with respect to its proper operation in intervals of 6 months. The inspection may only be executed by a skilled electrician or by personnel that has been trained in electrical skills, provided that suitable measuring and test equipment is used.

2.9 Safety notes: Dust

Caution! Ultra-fine sanding dust!



Sanding of wooden floors naturally produces dust. Always wear a respirator.

When the machine is used for its proper purpose, the sanding of wooden floors naturally produces dust. The machine has an integrated vacuum system. Even so, this cannot prevent fine and ultra-fine dust being produced when using the machine.



Caution! Health risk!

Wood dust, particularly when treated with impregnating agents, solvents and coatings, can cause allergic reactions (e.g. of the skin or respiratory system) after a sensitization period. Beech and oak dust is classified as being carcinogenic (cancer of the nasal mucous membranes). Dust from other kinds of wood is suspected of having a carcinogenic effect.



Caution! Fire risk!
No smoking while sanding!

All ignition sources are prohibited in rooms where sanding work is being carried out!
Air the rooms thoroughly.

Together with an ignition source and the oxygen in the air, wood dust can cause fires and explosions.

2.10 Danger of cutting



Attention, Danger of cutting!

Sharp borders at the sanding disc.



Attach the sanding disc carefully.
Wear protective gloves when mounting or changing the sanding discs.

3 General instructions for the user

3.1 Scope of delivery





1. Cpl. handle (mounted)
2. Cpl. Machine housing
3. Vacuum system (dismounted)
4. Planetary head system (dismounted)
5. Operation manual

3.2 Disposal

The cardboard is usable again and can be used as a camp container. We recommend keeping the cardboard for possible back delivery for continuous examination.

3.3 Dimensions / Weight / Technical details

Total weight: 94,- kg

Dimensions: 1300 x 450 x 700 cm

4 Assembling

The machine is delivered ready to use.
The assembly of the vacuum system and the planetary head system occurs only at the application place.

5 Transport

In many cases it is inevitable to transport resp. carry the machine to the point of utilisation.

Warning, break danger!

Do not throw the machine and do not transport it unfastened on loading area.

6 Operation

6.1 Assembly of the vacuum system and the planetary head system



1. Switch off the machine and disconnect the connection cable from the mains. Turn over the machine backward on the floor with upright handle.

To avoid damages to the transformer case you open out the guide rod (1)!



2. Center and place the vacuum hood ring (2) on the planetary head system as pictured.

3. Place the planetary head system so that the reference (3) can be inserted between the two parts indicated with (4), lift the machine so that the clutch (5) can be inserted in the suitable planetario opening (6).

Attention: Do not set the machine on accessory discs and switch on the machine to lock in – machine and discs can be damaged - no guarantee!

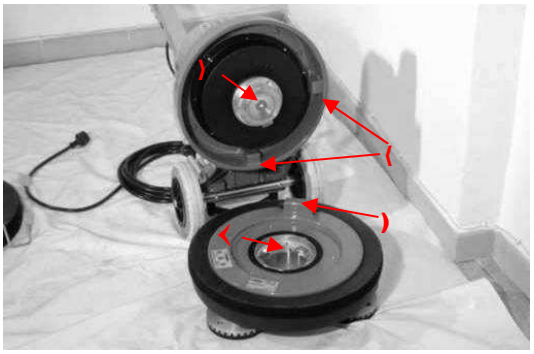

4. Removing trolley
   Unscrew ball grip (7) and remove trolley wheels as pictured.

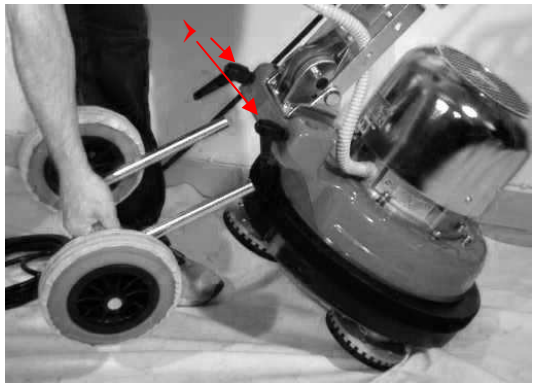

5. Insert working trolley
   Insert the directional trolley wheels as pictured, and adjust trolley in a comfortable position after placing machine in “working position” tightening trolley with provided knobs (7). **Do not use the directional trolley for carrying or transporting the machine, but only for grinding an polishing.**
   Maintenance: Always clean the directional trolley each time after working and lubricate the bearings regularly.



6. Assembly of the vacuum system
   Attach the rubber vacuum hood attachment (14) correctly to the frame of the machine (13) so that it just brushes the floor and connect an suitable industrial vacuum cleaner.

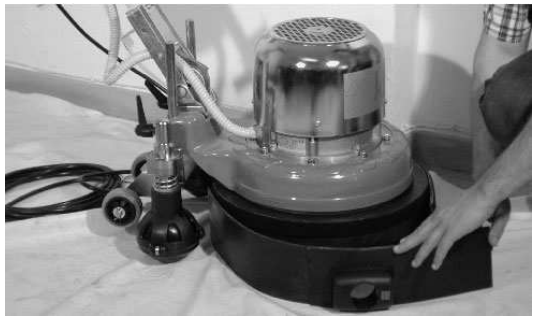

7. Placing the sanding discs



Attention, Danger of cutting!



Sharp borders at the sanding disc.

Attach the sanding disc carefully.
Wear protective gloves when mounting or changing the sanding discs.

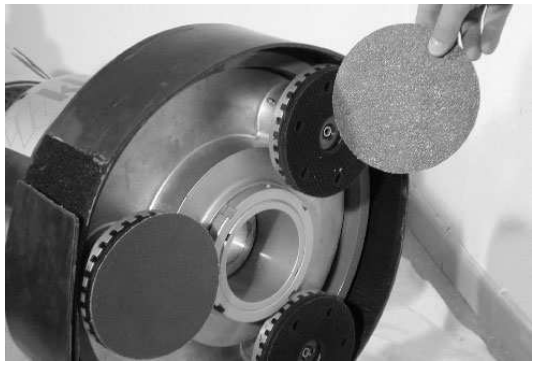

Carefully attach the sanding discs to the velcro tool holder making sure it is centered.

Set the machine in horizontal position again.

6.2 Preparation of the machine

Adjustment of the handle

For a light and exact use of the machine the right height setting of the handle is important.

To adjust the handle, pull right lever and adjust the handle in the right position, body height of the operator (basin-height).

6.3 Starting the machine

Caution, Danger of injury!

The motor starts immediately when turned on.
Hold the machine firmly *with both hands*.

Working steps:

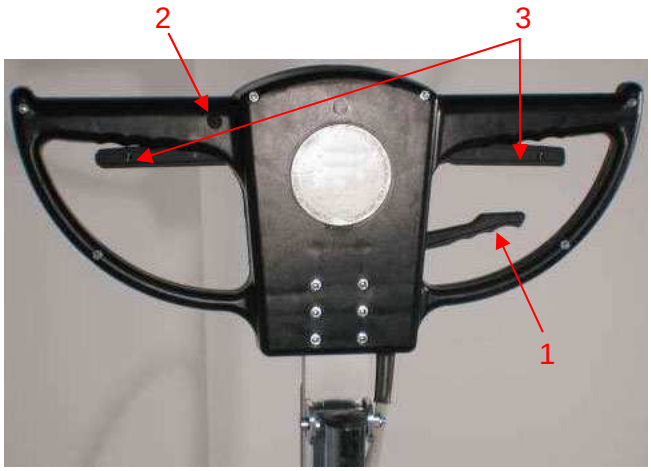

1. Place the machine upright with attached vacuum- and planetary head system.
2. To adjust the handle, pull right lever and adjust the handle in the right position, body height of the operator (basin-height).
3. Connect the connection cable.

   Make sure you have the right frequency and voltage before putting the plug in the power socket. Check instructions showed on the machine identifikation plate.

   In old buildings we recommend to use the Current limiter for soft starts Article 1914925
4. Switch on the machine by pushing the safety switch (2) and one of the double-sided start lever (3).
5. The machine stops by releasing the start lever.

6.4 Leading the machine

By slight push of the handle down the machine turns to the left.
By slight pull of the handle up the machine turns to the right.

Caution! Move the handle very carefully. By release and holding of the handle in the same position, the machine turns on the same place.

Attention! When crossing and damaging the electrical cable:
DANGER due to electric shock!

6.5 After the operation

1. Dismount and clean the planetary head system

   Operation steps:

   1. Switch off the machine and disconnect the connection cable from the mains.
   2. Tilt back the machine to the floor with vertically put handle.
   3. Unlock the flange of the disc from the machine (Bayonet connector). Put the machine in horizontal position again.

2. Roll up the connection cable

   Roll up the cable around the lower cable holder and the handle grip.

Attention! Check the cable while rolling up and remove impurities like dust and sanding remainders.

7 Inspection before, during and after the operation

Machine component	Frequency	Measure
Electric connection	Check before the use	Check whether the mains voltage of your household are identical with the information on the machine sign and that the plug disposes of an adequate ground.
Electric cables and connectors	**Attention! Danger to life due to electric shock! Never use damaged cables or damaged connectors.** Check state.	If the cable is damaged, have it repaired by the professional electricians or by the manufacturer.
Planetary head system	Check before the use	Check for cleanness and foreign objects and ease-of-movement; remove sanding remainders and dust depositions. (Stripe education)

E Spare parts list

E.1 Ordering information for spare parts

An unmistakable identification and designation of the parts ensures that the correct part will be delivered.

In order to avoid transmission errors and extensive descriptions it is recommended to use only the designations and the numbers stated in the spare parts list.

E.2 Ordering address

Address your spare parts order to:

Roll GmbH
Albstr. 12
D-72820 Sonnenbühl
Germany

Telefon +49 (0) 7128 / 92800
Telefax +49 (0) 7128 / 928011
E-Mail info@roll-gmbh.de
Internet www.roll-gmbh.de

Exploding view Woody

Complete handle

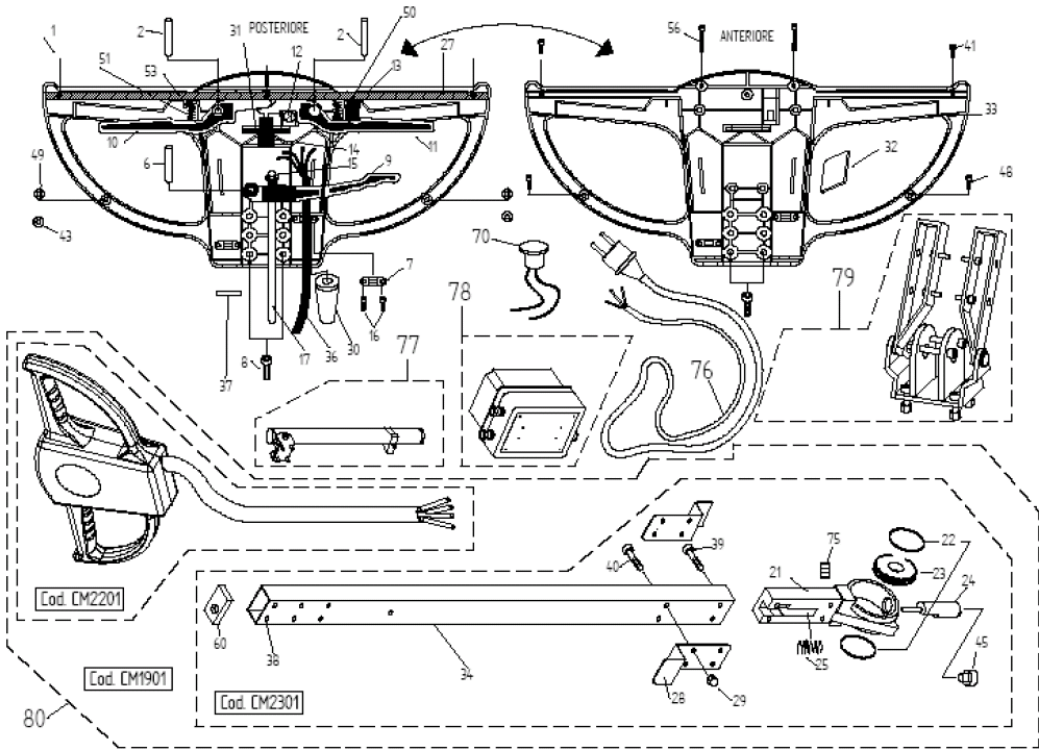

Guide rod

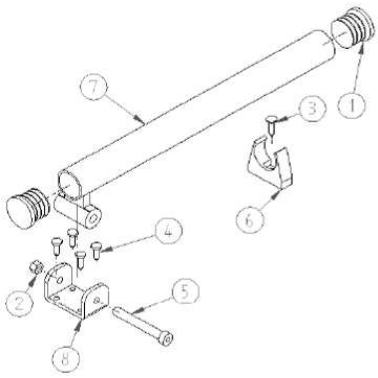

Reinforced machine support

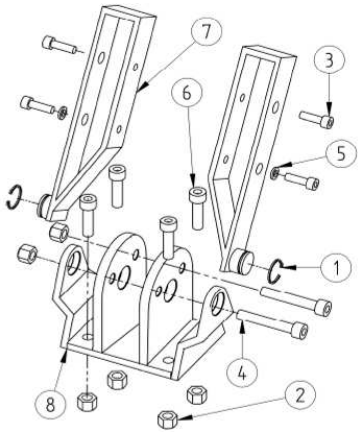

Trolley

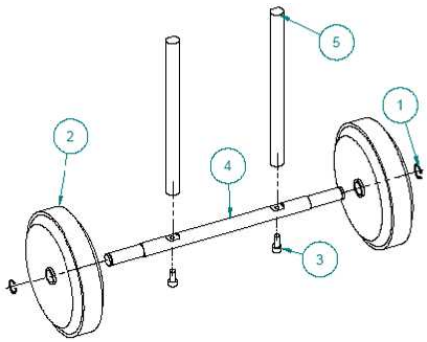

Exploding view Woody

Working trolley

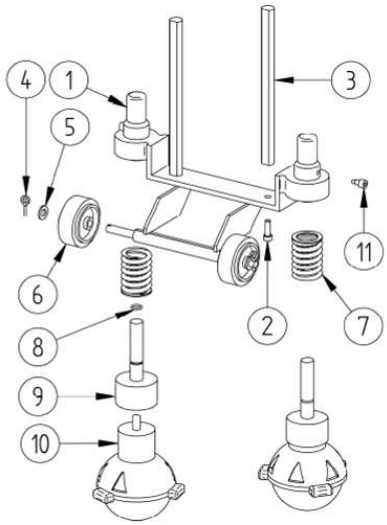

Transformator

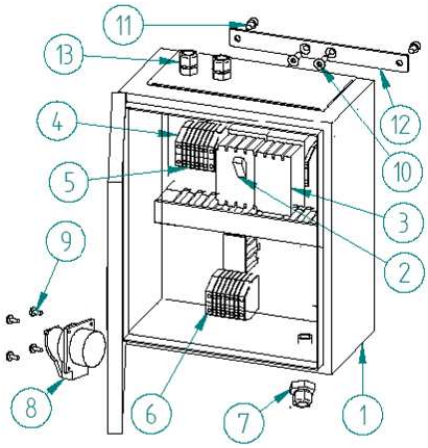

Vacuum system

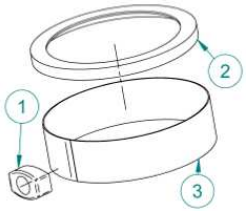

Gear

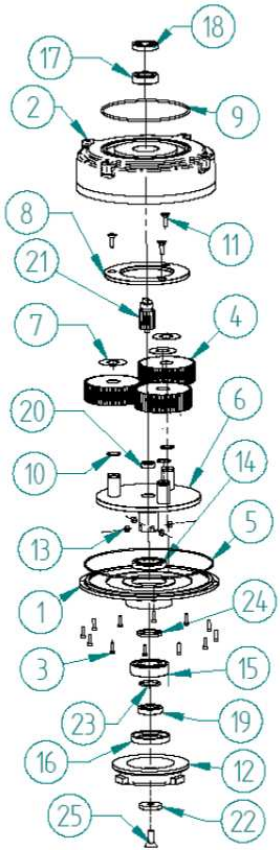

Machine housing

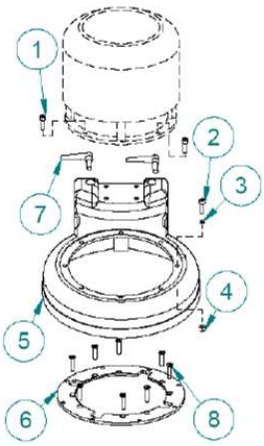

Planetary head system

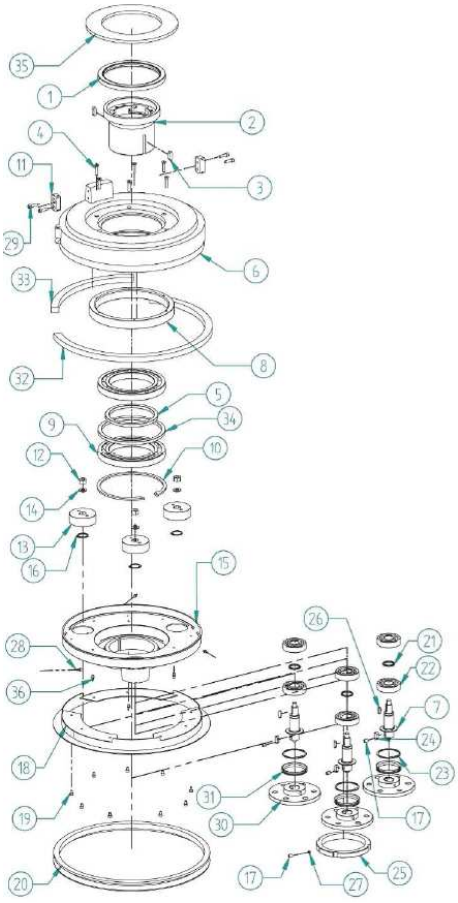

CE DECLARATION OF CONFORMITY

Roll GmbH, Albstr. 12, 72820 Declares under its own responsibility that the new machine Parquet sanding machine Woody conforms to the following Directive:

CE (98/37/CE) CE (73/23/CEE) CE (89/336/CEE)
And moreover it is built in accordance with the following norms:
EN 60 335 – 2 – 10.1990 **BS 5415 SECTION 2.2 : 1986** **Reference n° EM 000141** **IEC34 – 1; IEC34 – 7; IEC72 –1** **CEI2 – 14** **EN60204; EN60034 – 5; EN50081 – 1; EN50081 – 2**

Place / Date / Signature: Sonnenbühl 14.06.2010, Roll GmbH

This CE Declaration of Conformity was made out mechanically and is valid without sign.