# Operation manual
# Parquet saw RO-4

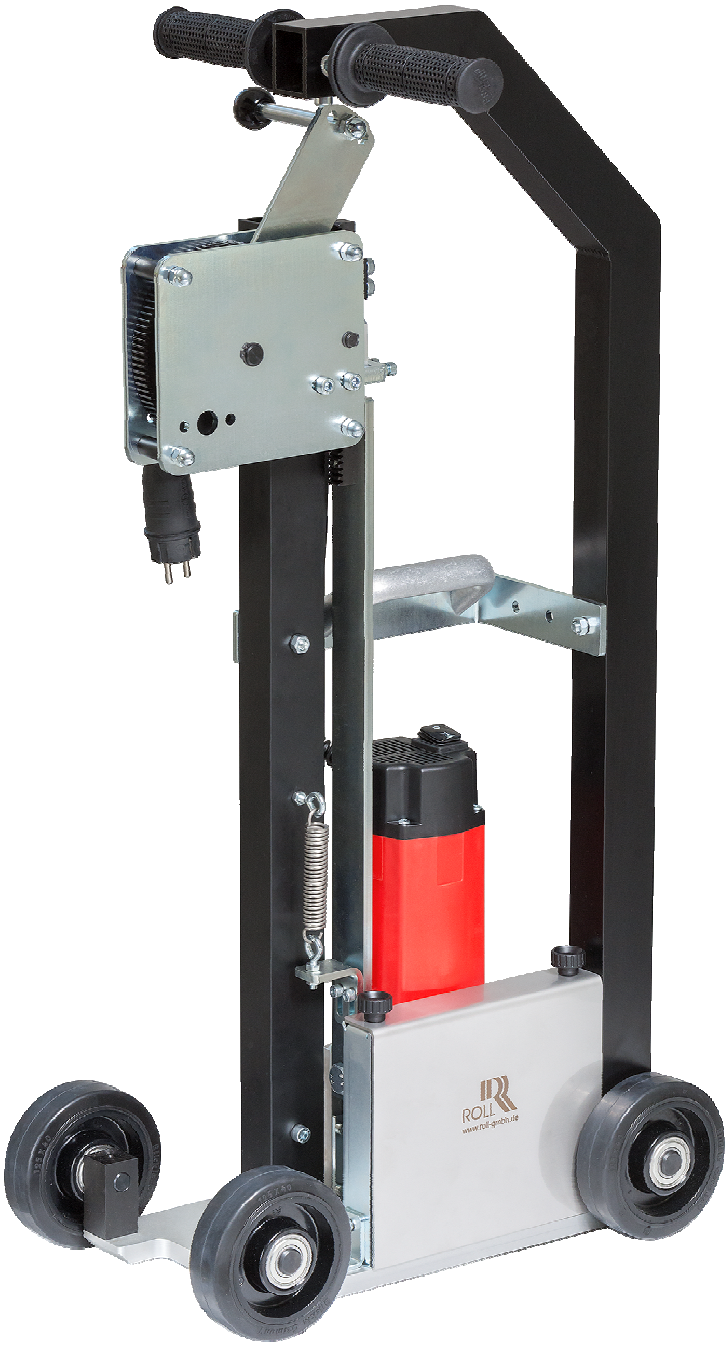

# Operation manual / Spare parts list

## Parquet saw RO-4

**Index**


| | | |
|---|---|---|
| **1** | **Preliminary notes** | 4 |
| 1.1 | General notes for the operator | 5 |
| 1.2 | Main description of the parquet saw RO-4 | 6 |
| 1.3 | Storage | 6 |
| 1.4 | Guarantee | 6 |
| **2** | **Safety notes** | 7 |
| 2.1 | General information | 7 |
| 2.2 | Danger of the machine | 7 |
| 2.3 | Safety Instructions Operation | 7 |
| 2.4 | Designated use | 7 |
| 2.5 | Basic safety instructions | 8 |
| 2.6 | User Prerequisites | 8 |
| 2.7 | Inspection according to VBG 4 § 5 (1) No. 2 | 8 |
| 2.8 | Safety notes | 9 |
| 2.8.1 | Safety instructions Electrical connection | 9 |
| 2.8.2 | Safety Instructions Operation | 10 |
| 2.9 | Safety Instructions Dust | 11 |
| 2.10 | Safety instructions Noise | 11 |
| 2.11 | Danger of cutting | 11 |
| 2.12 | Dangers when using the machine | 11 |
| 2.13 | Safety devices | 12 |
| **3** | **General instructions for the user** | 12 |
| 3.1 | Scope of delivery | 12 |
| 3.2 | Important components of the machine | 13 |
| 3.3 | Accessories | 13 |
| 3.4 | Disposal | 13 |
| 3.5 | Dimensions/Weight/Technical details | 14 |
| **4** | **Assembly** | 14 |
| 4.1 | Safety instructions Assembly | 14 |
| **5** | **Transport** | 14 |

**Index**


| | | |
|---|---|---|
| **6** | **Operation** | 15 |
| 6.1 | Choosing the right saw blade | 15 |
| 6.2 | Time to replace the saw blade | 15 |
| 6.3 | Assembly of the saw blade | 15 |
| 6.4 | Prepare machine | 16 |
| 6.4.1 | Adjust cutting depth | 16 |
| 6.4.2 | Adjust the position of the lowering lever | 16 |
| 6.4.3 | Adjust handle | 17 |
| 6.4.4 | Adjust hose and cable holders | 17 |
| 6.4.5 | Fastening of the connecting cable | 17 |
| 6.4.6 | Connection to the vacuum cleaner and attachment of the hose | 17 |
| 6.5 | Start-up of the machine | 18 |
| | **EC Declaration of Conformity** | 19 |
| | **Exploded Drawings** | |
| | Exploded View - Base Plate | 20 |
| | Exploded View - Motor Connection | 21 |
| | Exploded View - Lowering Mechanism | 22 |
| | Exploded View - Drawbar | 23 |
| | Parts List - Base Plate | 24 |
| | Parts List - Motor Connection | 24 |
| | Parts List - Lowering Mechanism | 25 |
| | Parts List - Drawbar | 25 |

## 1 Preliminary notes

Dear customer,

you have decided for the Parquet saw RO-4, the correct choice for quality and performance.

This operation manual contains important notes for the operation of your machine.

***Note!***

*Please read the operation manual carefully, in particular the safety notes and ensure that all operators read this operation manual prior to operate the machine.*

*Adherence to the safety notes not only helps to protect against potential dangers for health and personal safety but also prevents an improper utilization of the machine.*

*Pay attention and adhere to all warning labels on the machine. Replace any missing or damaged labels immediately.*

*It is too late if you do it while working!*

*Never allow anybody without sufficient skills and knowledge to operate the machine.*
*This will allow you to operate the machine without running any danger and encountering any troubles. It will help you to avoid any unnecessary delays caused by repairs, and will pave the ground for an optimum utilization and operation of this equipment.*

No liability for the damages which originate from the use of these operating instructions.

Changes reserve.

**Roll GmbH**
Flooring technology
Albstr. 12
D-72820 Sonnenbühl
Germany

Phone: +49(0)7128-92800
Fax: +49(0)7128-928011
E-Mail: info@roll-gmbh.de
http://www.roll-gmbh.de

State: March 2022

In these operating instructions, important information on safety and damage prevention are marked with symbols.

Please pay particular attention to the instructions marked in this way.
They indicate a potentially dangerous situation. Non-observance can lead to death, severe injuries and damage to property.



**Warning!**

Designates a potentially hazardous situation.
Please note that failure could cause death or injuries.



**Attention!**

Designates a dangerous situation.
Please note that failure could cause damages at products or others.



***Note!***

*Important notes on the operation, intended for an optimum utilization of the equipment and other useful information.*

*The operation manual is intended to accompany the machine.*

*The operation manual has been prepared by the manufacturer on the basis of his knowledge and experience with respect to design, production and operation.*
*Specific instructions of the user may be added to these operation manual (for example to refer to surveillance and reporting regulations, inter-company maintenance and inspection schedules. The inspection intervals are in accordance with VBG 4 §§ 3 and 5 und § 20 GefStoffV (Regulations of hazardous materials).*

## 1.1 General notes for the operator

As a operator you are responsible for:

- The proper and normal operation by trained persons only,
- The adherence to the safety regulations, the safety notes, and the provisions referring to working safety and accident prevention,
- The technical instruction of the operation personnel on the equipment and their reading of the operation instructions of the equipment..

## 1.2 Main description oft he parquet saw RO-4

The parquet saw RO-4 was designed for pre-cutting parquet, floorboards and similar floor coverings.

## 1.3 Storage



**Caution!**
Store the machine dry!
Remove tools when storing to avoid injuries!

## 1.4 Guarantee

ROLL ensures a guarantee and liability are in accordance with our currently valid general business and sales conditions. The guarantee runs out after 12 months from purchase date.

We reject any guarantee claims for tools which are not in their original condition, or for altered or changed tools or which are not used in accordance to the intended use.

We guarantee free maintenance of this machine when getting carriage paid, in case of damages due to manufacturing defects or material defects; provided that the machine is correct used and not changed or altered. Wearing parts are not under warranty

The guarantee claim expires:

- In case of damages caused by improper operation and utilization other than intended use.
- In case of incorrect assembly, intervention of unauthorized persons or utilizations of accessories or replacement parts that are not ROLL original parts (with exception of commercially available sanding discs).

We strongly recommend the use of genuine ROLL spare parts and accessories even after expiration of the warranty period. This is the only way to ensure an impeccable operation of your machine.



**Note!**

*Check the shipment in order to ensure that it is complete in accordance with the chapter „scope of delivery“, and inform your dealer immediately, should any shipment be incorrect.*

# 2 Safety notes

## 2.1 General information

Adherence to the safety notes helps to protect against injuries and reduces the risk of an improper utilization of the machine. Every user of this machine and personnel charged with the assembly, maintenance or repair of this machine must have read and understood the contents of the instructions prior to starting any work.

## 2.2 Danger of the machine



Warning, injury danger when starting the machine!
When starting the machine there originates an acceleration (the perceptible jerk) which can bring the machine out of control.

Hold the machine with both hands.

## 2.3 Safety notes: Operation



**Warning! Risk of death!**
**If you drive over the electrical lines, there is a risk of fatal injury from an electric shock!**

Perform a safety check prior to each start of the machine:

- Inspect the connecting cables and connectors/pugs for damage and improper connected load.
- Route the electrical cables properly to prevent persons tripping over them.
- Do not switch on the machine until it is in working position.
- Hold the machine firmly with both hands at the handle.
- Switch off the machine immediately when the operation is completed.

## 2.4 Designated use

The parquet saw RO-4 was designed for pre-cutting parquet, floorboards and similar floor coverings.

Use beyond this is considered to be improper.

Outdoor use is not permitted.

If the machine is used for purposes other than those intended, the manufacturer of the machine cannot be held liable for any damage to persons, property or pets resulting from such misuse.

## 2.5 Basic safety instructions

The parquet saw RO-4 has been designed and manufactured according to the recognized rules of technology and in compliance with the occupational safety and accident prevention regulations and the EC directive for the safety of machines for the intended use.

- Despite all safety and protective measures, dangers can emanate from the machine during operation, especially when improper use the causes is.

- Failure to comply with the operating instructions, particularly the safety instructions, poses a risk of injury or even death, as well as the risk of damage to property.



**Warning, electric shock hazard**
**Damaged cables and plugs must not be used. The machine may only be used if it is in perfect technical condition and with functioning safety devices.**

- The fast-moving parts (e.g. saw blade) on the machine are protected against unintentional contact or intervention with protective measures.

- On some construction sites, especially in buildings where the power supply network and the protection are unknown, a FI protective plug must be used to operate the machine safely.

## 2.6 User Prequisites

The users of this machine must

- be instructed in the operation of the machine,
- master the processes required for handling and assembly,
- know the applicable safety regulations for the operation of such machines and act accordingly,
- be informed about possible additional local regulations (e.g. for safety devices),
- be informed about possible dangers that can arise from the operation of such machines.

## 2.7 Inspection according to VBG 4 § 5 (1) No. 2

The operator must ensure that this machine is checked every 6 months to ensure that it is in good working order. The test may only be carried out by a qualified electrician or, if suitable test equipment is used, by electronically trained persons.

## 2.8 Safety notes

**Failure to follow these instructions could result in serious injury and/or damage. Read and follow all safety instructions.**

### 2.8.1 Safety instructions Electrical connection

**Warning! Risk of death!**

**If you drive over the electrical lines, there is a risk of fatal injury from an electric shock!**

**Safety check before each start-up:**

- Check the connecting cable and plug-in devices for damage, the correct connection value and damage.
- Lay the electrical cable in such a way that there are no tripping hazards.
- Only switch on the machine when it is in the working position.
- Hold both hands on the handles.
- Switch off the machine immediately after the operation.

If there are problems with the power supply (fuses, relays, etc.), please contact a specialized electrician.

For maintenance work or repairs, be sure to switch off the machine and pull out the mains plug.

Never use the machine with a defective cable, this can lead to an electric shock. Only use undamaged plugs and cables.

Injury or death from electric shock can result if the cord is damaged. Always keep the cable elevated above the machine. If the machine runs over or damages the cord, accidents may result from electric shock. Always route the cable to the rear.

Failure to properly connect the machine to the electrical system could result in death from electrocution. For maximum protection against electric shock, please use an electrical system with a safety switch.

Worn or damaged in any way cords or plugs should only be replaced by an electrician or professional service personnel.

Only use approved cables with a cross-section of $3x2,5^2$. Using the machine with a cable of insufficient cross-section and/or excessive length can lead to property damage or personal injury.

### 2.8.2 Safety Instructions Operation

In order to be able to work as safely as possible, you must wear the correct clothing and equipment when working with the parquet saw RO-4. The clothing must be appropriate and must not impede. Do not wear clothing that can get caught. Secure long hair e.g. with a hairnet.



**Caution! Wear safety glasses!**
To protect the eyes, protective goggles must be worn during operation and for all work.



**Caution! Wear suitable work clothing!**
Do not wear loose clothing during operation and for all work. This can be caught by moving parts.



**Caution! Wear safety shoes!**
Wearing safety shoes protects against serious foot injuries.



Keep hands and feet well away from machine parts being worked on. The moving parts of this machine can cause serious injury and/or damage.



No one may be in front of the machine while it is working!



When using an incompletely assembled machine, personal injury and/or property may result. Do not use the machine before it has been fully assembled. Keep all fasteners closed.



Do not rivet or screw signs or symbols onto the device, as this can render the protective insulation ineffective. Adhesive labels are recommended.



Servicing and repairs by unqualified personnel may result in injury or damage and will void all warranties.



Exposing the machine to water or rain can result in death from electric shock. The machine must be stored in a dry building.



Only use faultless and sharp saw blades.



The suction hood or saw blade cover may only be removed to change the saw blade!
The machine must never be operated without the saw blade cover. Risk of injury!

## 2.9 Safety Instructions Dust



**Warning! Finest sanding dust**

**Fine and finest dust is formed during the sanding. The dust could result in health problems when inhaled. Therefore, always carry a dust protection mask during sanding.**

If the sanding machine is subject to normal operation, dust will naturally be generated.
The dust is sucked off by the vacuum system. Despite of this, it is impossible to prevent fine and finest sanding dust from being generated during the operation of the machine.

## 2.10 Safety Instructions Noise



**Caution! To wear ear protection!**

Hearing protection must be worn during operation.

The following sound level value was determined for the parquet saw RO-4 according to DIN 45645:

sound level
CEN/TC 255 N
Sound pressure level 95 dB(A)
Sound power level 108 dB(A)

The noise generated when using the machine depends on various factors.
The local conditions such as room size and floor conditions influence the noise development.

## 2.11 Danger of cutting



Caution, danger of cuts from sharp edges when attaching the saw blade!

Attach carefully.
Wear gloves when attaching or changing.

## 2.12 Danger when using the machine



The saw blade lowers and dips into the floor covering by pulling the lowering lever on the guide handle. With the saw blade lowered, you may only drive forwards! When pulling back the machine, the lowering lever must be released so that the saw blade lifts and remains in the suction housing.

## 2.13 Safety devices

In order to avoid danger and injuries to persons, the parquet saw RO-4 is equipped with mechanical safety devices.

Saw blade hazard: Keep hands, feet and non-adhering parts of clothing well away from saw blade. The saw blade can cause serious injury and/or damage. To avoid danger from the saw blade, the parquet saw RO-4 is equipped with safety devices:

- Suction or saw blade housing
- Saw blade retraction mechanism

# 3 General user instructions

## 3.1 Scope of delivery

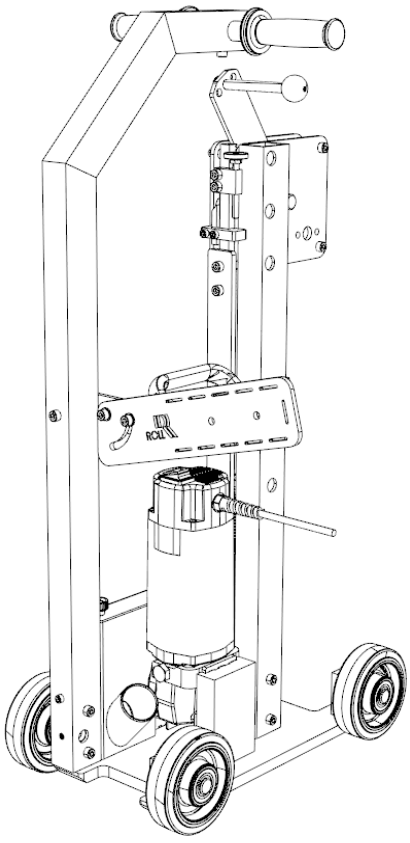

1. Parquet saw RO-4 (assembled)
2. Extension cord (not illustrated)
3. Tool set (not illustrated)
4. Operation manual (not illustrated)

## 3.2 Important components of the machine

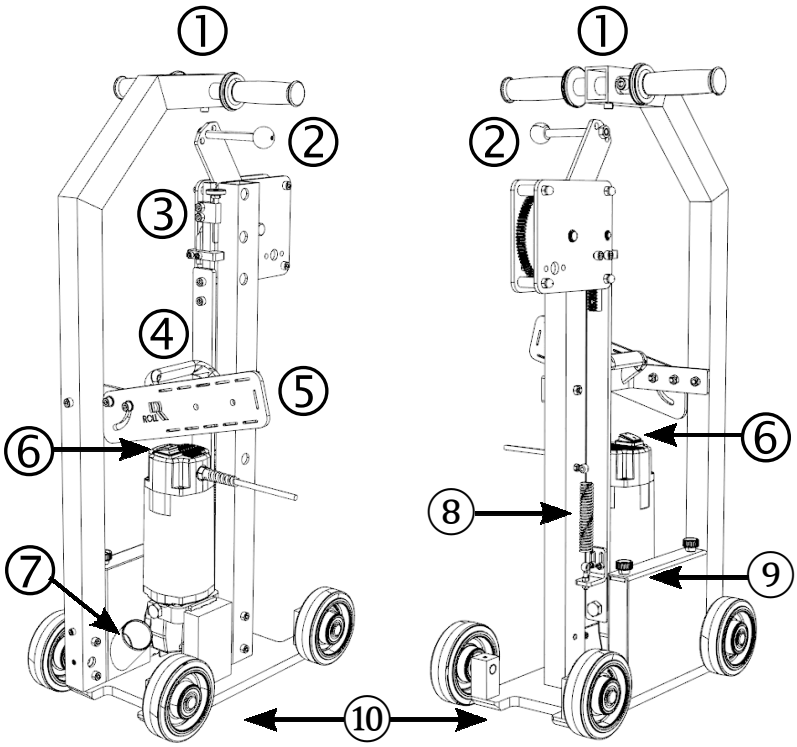


① handle
② lowering lever
③ depth adjustment
④ carrying handle
⑤ hose and cable holder
⑥ on / off switch on the motor
⑦ exhaust nozzle
⑧ tension spring for pull-back mech.
⑨ exhaust hood cover
⑩ chassis with wheels

## 3.3 Accessories



Article: 43.40555
**Replacement blade for parquet saw**
Carbide saw blade Ø 180mm



Article: 43.40575
**Diamond blade for parquet saw**
Ø 185mm

## 3.4 Disposal

The box is reusable and can be used as a storage container.
We recommend keeping it in case it is returned for inspection or repair.

## 3.5 Dimensions / weight / technical data

| | | |
|---|---|---|
| **Technical data:** | Drive motor: | 2200 watts, 230 volt |
| | Rotation: | 4000 rpm |
| | Saw blade: | Ø 180 mm |
| | Cutting depth: | 0mm – 22 mm |
| | Dimensions: | 500 x 280 x 950 mm |
| | Weight: | 31 kg |

## 4 Assembly

The parquet saw RO-4 is delivered fully assembled. The connection to the vacuum cleaner and to the power supply is only made at the place of use.

## 4.1 Safety instructions Assembly

**Caution! Material damage possible!**
**The work must be carried out sensitively and with the right tools.**

## 5 Transport

It is often unavoidable that the machine has to be transported or carried to its place of use. Due to the low weight and the handy dimensions, no handling instructions are required.

**Caution, risk of breakage!**
**Do not throw the machine and do not transport it unsecured on the loading area.**

## 6 Operation

### 6.1 Choosing the right saw blade



For multi-layer parquet

Article: 43.40555
Carbide saw blade Ø 180mm



For solid parquet

Article: 43.40575
Diamond saw blade Ø 185 mm

### 6.2 Time to replace the saw blade

The saw blade must be changed at the latest when the cutting quality decreases.

In addition, the saw blade should be changed if the floor covering changes, especially multi-layer parquet and solid parquet.

### 6.3 Assembly of the saw blade

Procedure:



1. Turn off the machine and pull the power plug out of the socket.



Wear gloves when attaching or changing the saw blade.

2. Open the two knurled screws ① on the saw blade housing ②.
3. Remove the saw blade housing.
4. Lock the motor spindle with the supplied open-end wrench size. 17
5. Open the clamping nut with the supplied pin wrench.
6. Remove the saw blade.



7. Place the new saw blade on the motor spindle.
   Pay attention to the correct direction of rotation!
   See also arrow in suction housing.
8. Lock the motor spindle with the open-end wrench.
9. Close the clamping nut with the pin wrench.
10. Mount the saw blade housing ②.
11. Close two knurled screws ①.

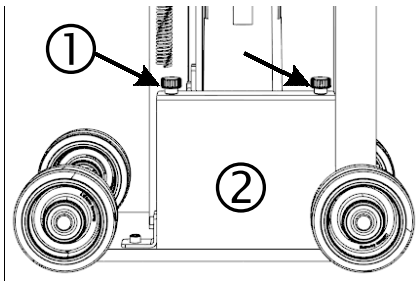


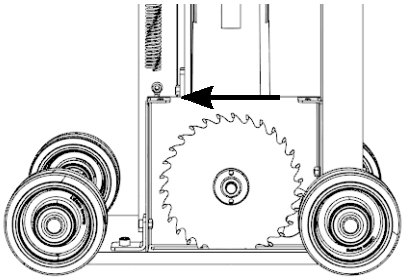

## 6.4 Prepare machine

### 6.4.1 Adjust cutting depth

In order to avoid material damage, it is important to set the correct cutting depth.

2/3 of the multi-layer parquet is cut with the hard metal saw blade.
Solid parquet is cut through to the glue with the diamond saw blade.

The machine is delivered from the factory with the setting "0".

Procedure:

1. Measure the thickness of your floor covering.
2. Lay the machine on its side so that the saw blade can be lowered accordingly.
3. Hold the knurled nut ① and loosen the hexagon screw on the threaded rod ② a few turns.
4. Slowly pull the lowering lever ③ and at the same time read the depth on the scale ④ until the desired depth is reached.
5. When the depth is reached, hold the lowering handle ③ further tighten and turn the knurled nut ① clockwise until the threaded rod ② hits the stop ⑤.
6. Release the lowering lever ③.
7. Hold the knurled nut ① and tighten the counter nut on the threaded rod ②.

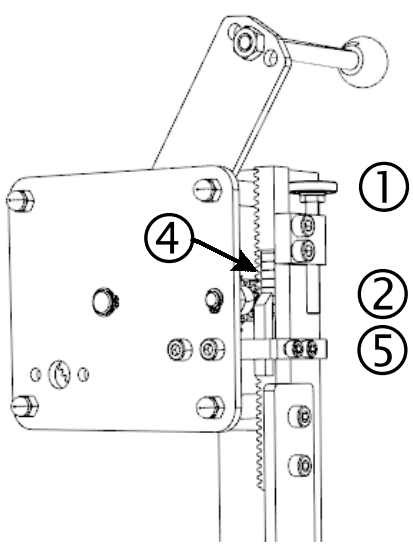


The scale is standardized for the carbide saw blade Ø 180 mm.
Please note the deviation of 2.5 mm with the diamond saw blade Ø 185 mm!
This means that with the diamond saw blade, the parquet saw cuts 2.5mm deeper than the scale indicates!

### 6.4.2 Adjusting the position oft he lowering lever

In order to work comfortably with the parquet saw RO-4, the lowering lever can be adjusted in three positions. The lowering lever is delivered from the factory in the middle position.

Procedure:

1. Hold the lowering handle ① firmly and open the nut ②.
2. Pull the lowering handle ① out of the mounting plate ③.
3. Insert the lowering handle ① in another mounting hole of the mounting plate ③ and tighten the nut ② again.

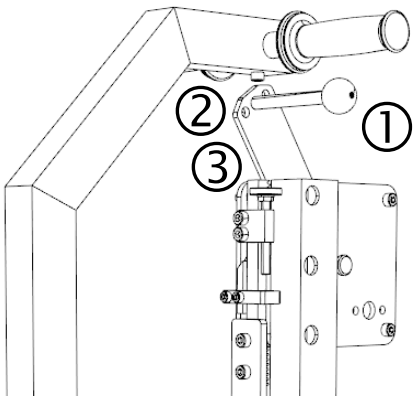

### 6.4.3 Adjust handle

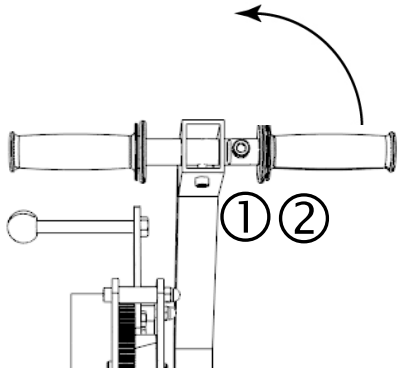


To work comfortably along the wall with the parquet saw RO-4, the right handle can be swiveled upwards.

Procedure:

1. Loosen the screw ① on the adjustable handle ②.
2. Swing the lowering lever handle ② up.
3. Tighten the screw ①.

### 6.4.4 Adjust hose and cable holder

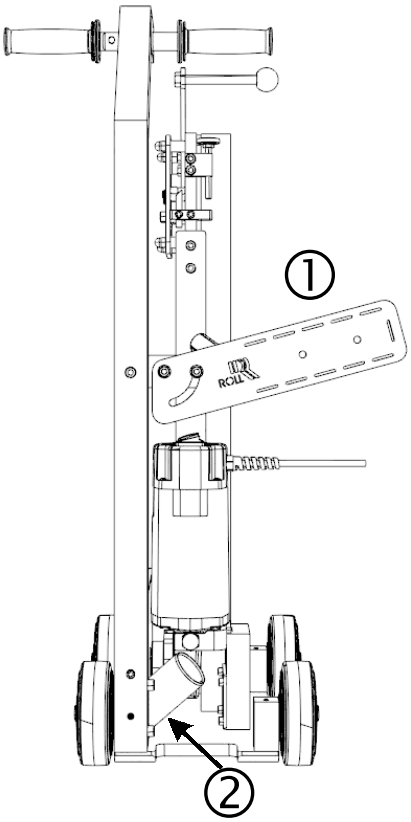


Procedure:

1. The hose and cable holder ① can be adjusted without tools.
2. Fold the holder ① up for transport.
3. Unfold the holder ① for operation.

We recommend leaving the hose and cable holder folded up for transport. The holder can be folded out for operation.

### 6.4.5 Fastening oft he connecting cable

Procedure:

4. Unfold the hose and cable holder ① as described previously.
5. Fix the connection cable to the hose and cable holder with the integrated Velcro strip ①.

### 6.4.6 Connection tot he vacuum cleaer and attachment of the hose

Procedure:

6. Unfold the hose and cable holder ① as described previously.
7. Attach the hose of your vacuum cleaner to the suction nozzle ②. Pay attention to the connection Ø of the suction nozzle of 50mm outside and 45mm inside.
8. Fix the hose to the hose and cable holder with the integrated Velcro strip ①.

## 6.5 Start-up oft he machine

Procedure:

1. Select the right saw blade for the parquet floor to be cut and mount it if necessary.
   See chapters "**Choosing the right saw blade**" and "**Assembly of the saw blade**".
2. Set the cutting depth according to your parquet floor.
   See chapter "**Adjusting cutting depth**".
3. Connect a suitable vacuum cleaner to the parquet saw.
   See chapter "**Connection to the vacuum cleaner and attachment of the hose**".
4. Connect the supplied extension cable to the machine and connect it to the mains.
   See chapter "**Fastening of the the connection cable**".

Note!
Lay the extension cord in such a way that it cannot be driven over and damaged as a result!

5. Switch on the parquet saw with the on/off switch on the motor.
   See chapter "**Important components of the machine**".
6. Hold the parquet saw with both hands on the guide handle.
7. Pull and hold the lowering handle. The saw blade dips into the parquet floor.
8. Drive the parquet saw forward to cut the parquet floor.
9. After a lane has been cut, release the lowering lever. The saw blade lifts out of the parquet floor.

Note!
Do not drive backwards with the saw blade lowered.
This will damage the saw blade.

10. Drive backwards with the parquet saw and offset it by the tool width of your stripper.
11. Repeat steps 6 to 9 to cut the second strip.

12. After all stripes have been cut, switch off the parquet saw with the on/off switch on the motor.

    After switching off, it can take some time before the saw blade comes to a standstill.

13. Disconnect the cable from the mains.

# EC declaration of conformity

Original- declaration of conformity

| | |
|---|---|
| Manufacturer: | Name: Roll GmbH<br>Street: Albstr. 12<br>City: 72820 Sonnenbühl<br>Country: Deutschland |
| Authorized person, for the compilation of technical documentation: | Name: Stephan Roll, Geschäftsführer, Roll GmbH<br>Street: Albstr. 12<br>City: 72820 Sonnenbühl<br>Country: Deutschland |
| Product: | Description: Parquet saw<br>Model: RO-4 |

The above machine meets the requirements of the following guidelines and standards:

- Machinery Directive 2006/42/EG
- EC directive for electromagnetic compatibility 2014/30/EU
- Low Voltage Directive 2014/35/EU

- DIN EN ISO 14118:2018-07 Avoid unexpected startup
- DIN EN ISO 12100 Security of machines
- DIN EN 55014-1 /-2 Electromagnetic compatibility
- DIN EN 60204-1 Electrical equipment of machines
- DIN EN 60745-1 Hand-held motor-driven electric machines
- DIN EN 45645-1 Determination of assessment levels from measurements.
  Noise emission from the neighborhood

Sonnenbühl, 2. März 2022

Stephan Roll, Geschäftsführer
Vorname, Name, Funktion

**Exploded View - Base Plate**

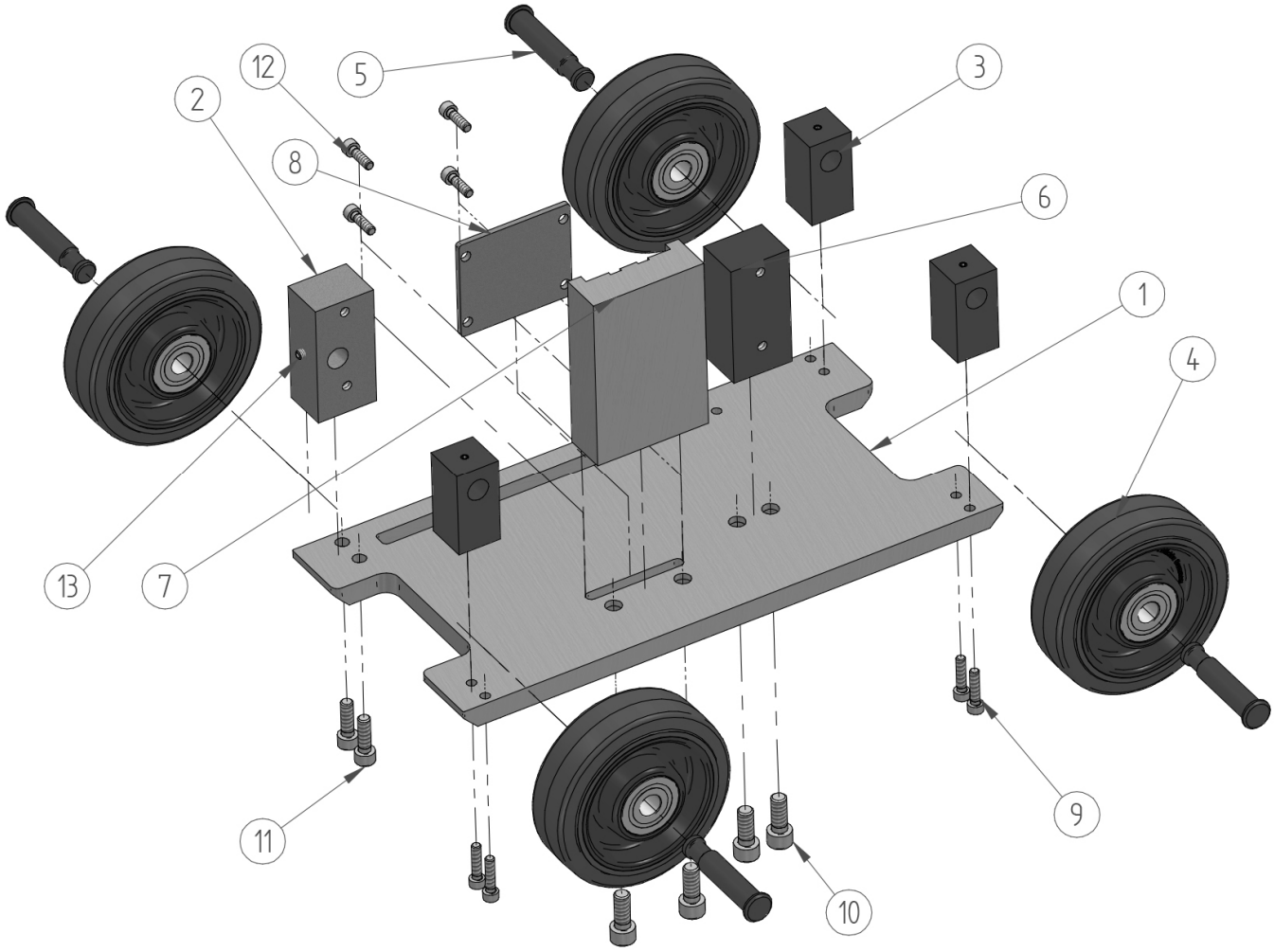

**Exploded View – Motor Connection**

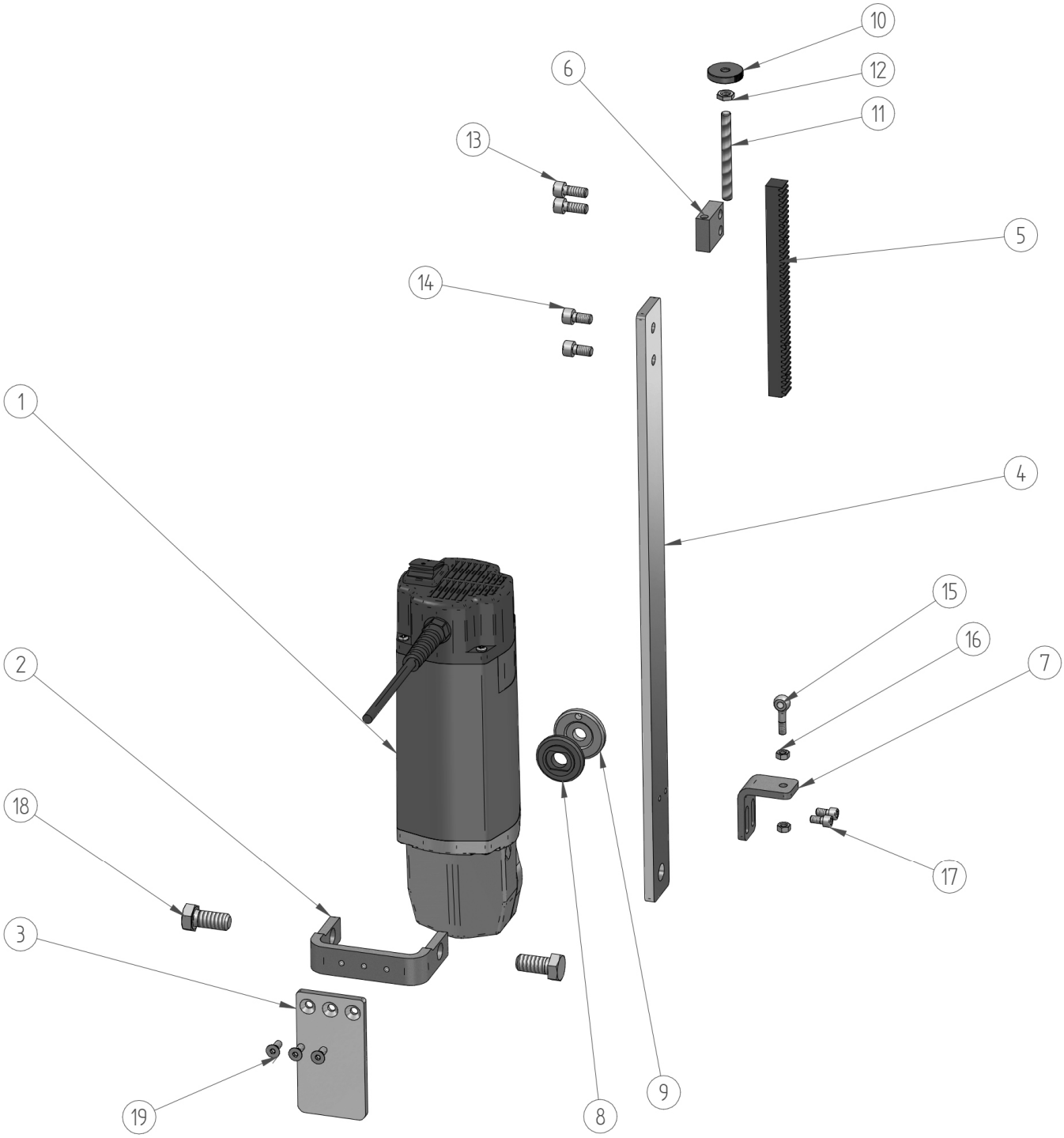

**Exploded View – Lowering Mechanism**

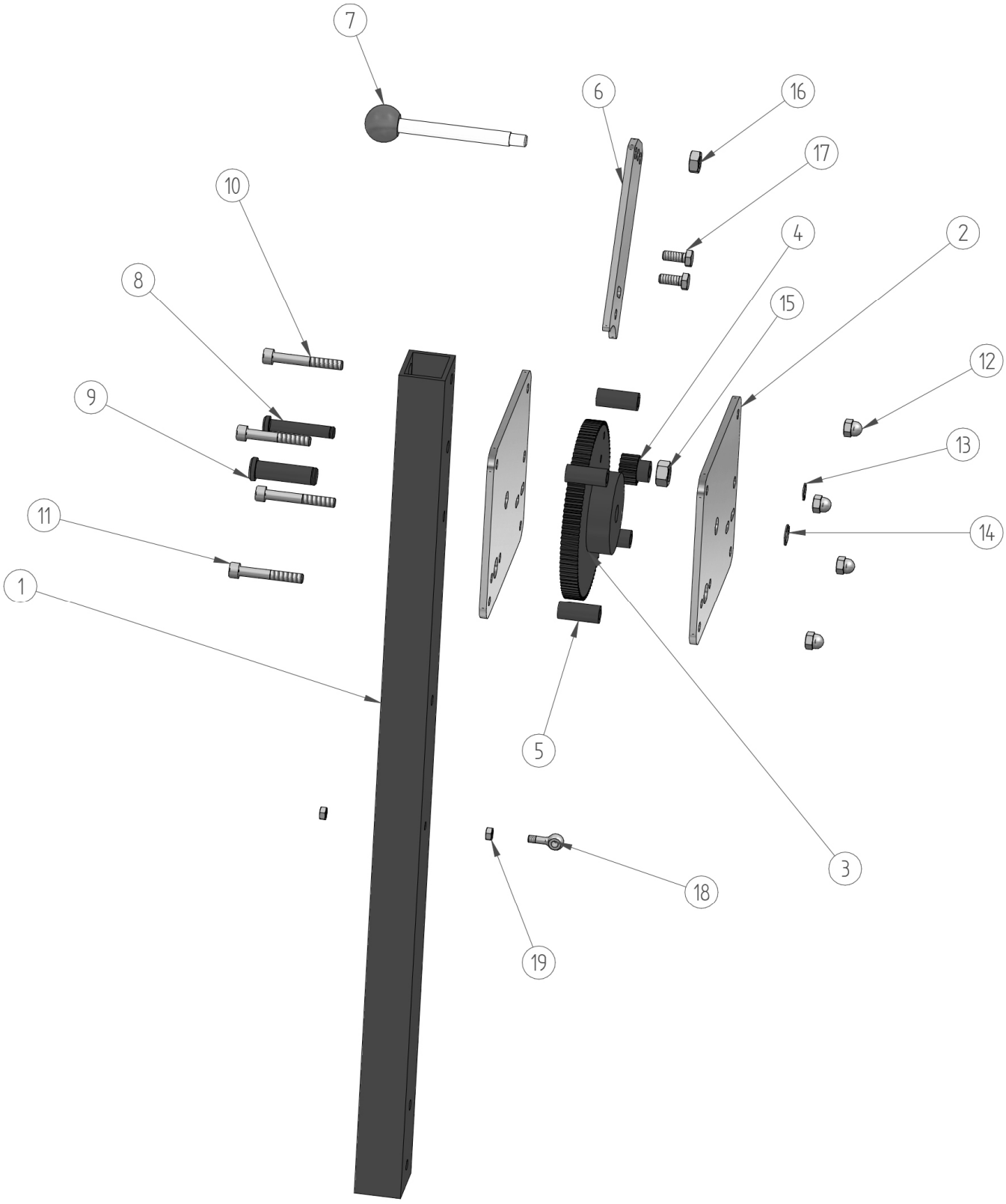

**Exploded View – Drawbar**

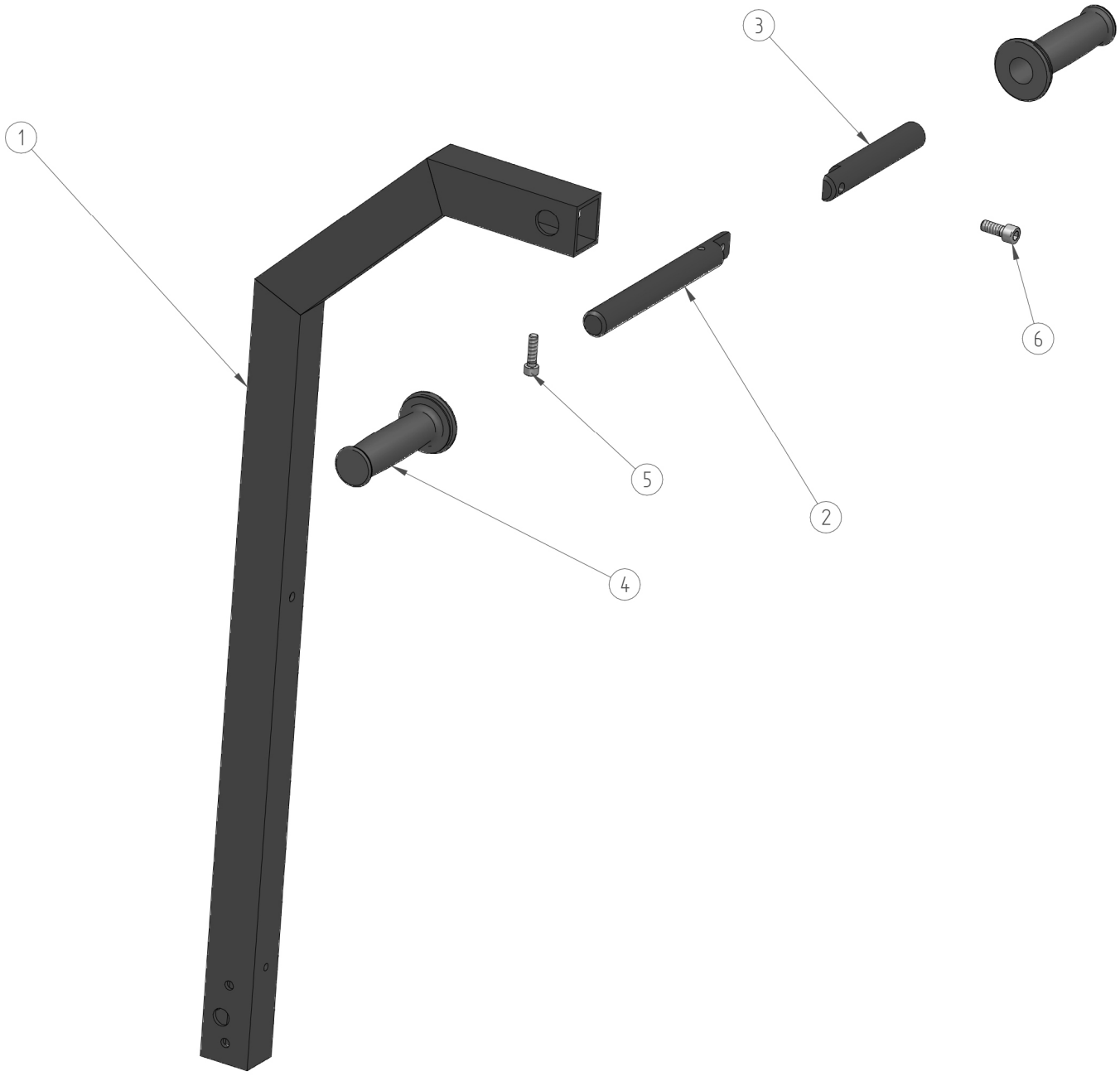

### Parts List – Base Plate

| Item | Article | Description | Quantity |
|---|---|---|---|
| 1 | 4340500 | Grundplatte Fahrgestell | 1 |
| 2 | 4340504 | Aufnahme Deichselrohr und Rad | 1 |
| 3 | 4340506 | Aufnahme Rad | 3 |
| 4 | 4340514 | Rad D125 | 4 |
| 5 | 4340508 | Radachse | 4 |
| 6 | 4340810 | Aufnahme Rohr | 1 |
| 7 | 4340230 | Führungsaufnahme Motor | 1 |
| 8 | 4340235 | Abdeckplatte Führungsaufnahme | 1 |
| 9 | 5620625 | Inbusschraube M6x25 DIN 912 | 6 |
| 10 | 5621025 | Inbusschraube M10x25 DIN 912 | 4 |
| 11 | 5620825 | Inbusschraube M8x25 DIN 912 | 2 |
| 12 | 5620620 | Inbusschraube M6x20 DIN 912 | 4 |
| 13 | 5680610 | Gewindestift M6x10 DIN 913 | 4 |

### Parts List – Motor Connection

| Item | Article | Description | Quantity |
|---|---|---|---|
| 1 | 4340200 | Motor für Parkettsäge RO-4 | 1 |
| 2 | 4340250 | Aufnahmewinkel Motor | 1 |
| 3 | 4340240 | Führungsleiste Motor | 1 |
| 4 | 4340650 | Anbindung Zahnstange | 1 |
| 5 | 4340620 | Zahnstange l=196 | 1 |
| 6 | 4340670 | Aufnahme Tiefeneinstellung | 1 |
| 7 | 4340690 | Winkelbefestigung Zugfeder | 1 |
| 8 | 3000010 | Sägeblattflansch | 1 |
| 9 | 3000020 | Spannmutter M14 | 1 |
| 10 | 5640809 | Rändelmutter M8 | 1 |
| 11 | 5680880 | Gewindestange M8x80 | 1 |
| 12 | 5640802 | Mutter M8 flache Form | 1 |
| 13 | 5620820 | Inbusschraube M8x20 | 2 |
| 14 | 5620816 | Inbusschraube M8x16 | 2 |
| 15 | 5642620 | Ringschraube M6x20 | 1 |
| 16 | 5640600 | Sechskantmutter M6 | 2 |
| 17 | 5620612 | Inbusschraube M6x12 | 2 |
| 18 | 5631425 | Sechskantschraube M14x25 | 2 |
| 19 | 5610616 | Senkschraube M6x16 | 3 |

### Parts List – Lowering Mechanism

| Item | Article | Description | Quantity |
|---|---|---|---|
| 1 | 4340750 | Rohr | 1 |
| 2 | 4340630 | Aufnahmeplatte Zahnräder | 2 |
| 3 | 4340610 | Zahnrad z100 | 1 |
| 4 | 4340615 | Zahnrad z15 | 1 |
| 5 | 4340634 | Distanzhülse Aufnahmeplatte | 4 |
| 6 | 4340660 | Aufnahme Senkhebel | 1 |
| 7 | 4340662 | Senkhebel | 1 |
| 8 | 4340632 | Achse d10 f. Zahnrad z15 | 1 |
| 9 | 4340636 | Achse d15 f. Zahnrad z100 | 1 |
| 10 | 5620860 | Inbusschraube M8x60 | 2 |
| 11 | 5620855 | Inbusschraube M8x55 | 2 |
| 12 | 5640803 | Hutmutter M8 | 4 |
| 13 | 5691000 | Sicherungsring 10mm | 1 |
| 14 | 5691500 | Sicherungsring 15mm | 1 |
| 15 | 5641200 | Sechskantmutter M12 | 1 |
| 16 | 5641000 | Sechskantmutter M10 | 1 |
| 17 | 5620820 | Sechskantschraube M8x20 | 2 |
| 18 | 5642620 | Ringschraube M6x20 | 1 |
| 19 | 5640600 | Sechskantmutter M6 | 2 |

### Parts List – Draw Bar

| Item | Article | Description | Quantity |
|---|---|---|---|
| 1 | 4340700 | Deichsel geschweißt | 1 |
| 2 | 4340720 | Führungsstange d25 | 1 |
| 3 | 4300355 | Griff verstellbar d25x155 | 1 |
| 4 | 4009018 | Gummihandgriff schwarz 25mm | 1 |
| 5 | 5620830 | Inbusschraube M8x30 | 1 |
| 6 | 5621025 | Inbusschraube M10x25 | 1 |

### Order address

Send your spare parts orders to:

**Roll GmbH**
Albstr. 12
D-72820 Sonnenbühl

Phone +49 (0) 7128 / 92800
Fax +49 (0) 7128 / 928011
Email info@roll-gmbh.de